REVISION HISTORY					
REV	DCN NUMBER	DESCRIPTION	DATE	ORIGINATOR	INCORPORATOR
00	D37649	INITIAL RELEASE.	04/11/1994	SJANG	YMK
01	D21838	REVISED PER ATI REVIEW.	12/07/1994	XXXXX	YMK
02	A40881	REVISED PER ATK REVIEW.	12/07/1994	SJANG	YMK
03	85270	MERGED ATT PACKAGE TO THE AWW POD PER PBU DIRECTIVE. REV. A2 BECOMES REV. 03.	05/16/06	AVALL	AVALL

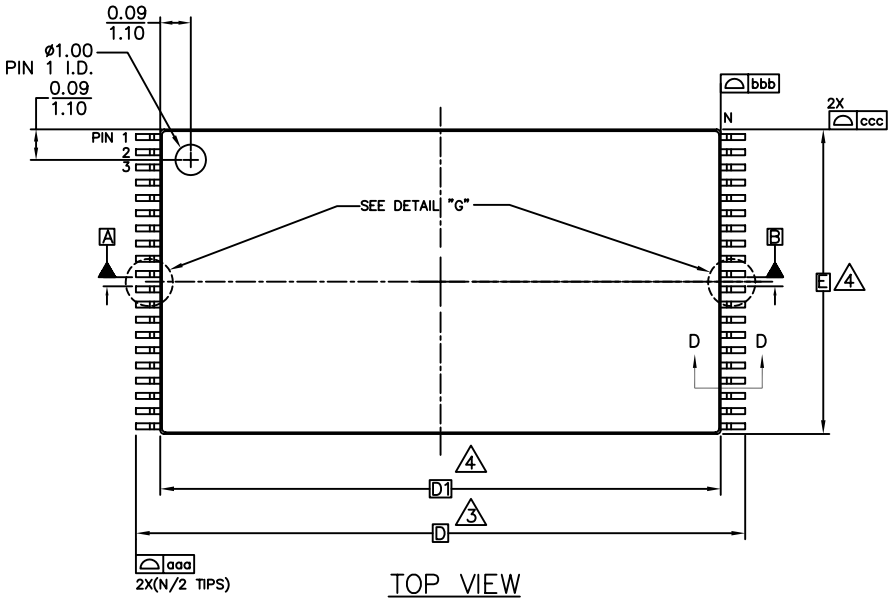

TOP VIEW

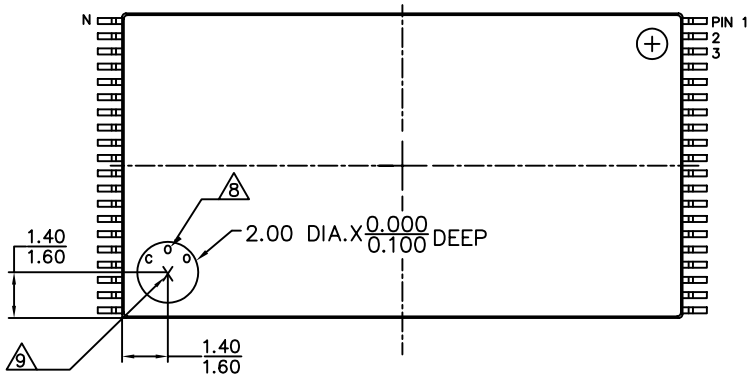

BOTTOM VIEW

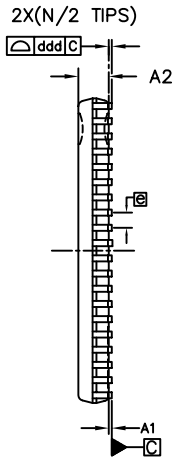

END VIEW

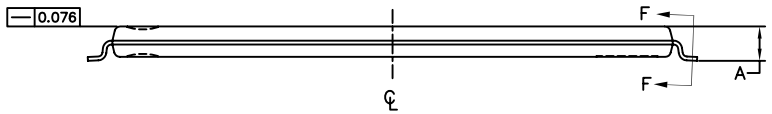

SIDE VIEW

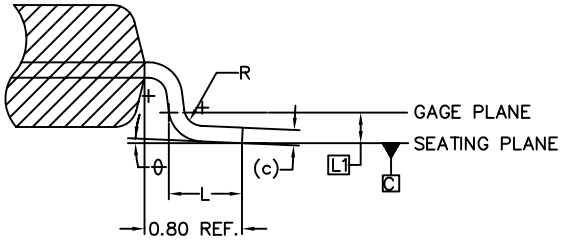

SECTION "D–D"
SCALE: 4:1

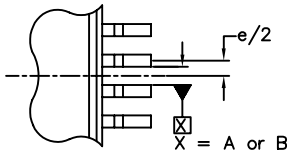

DETAIL "G"
SCALE: 2:1

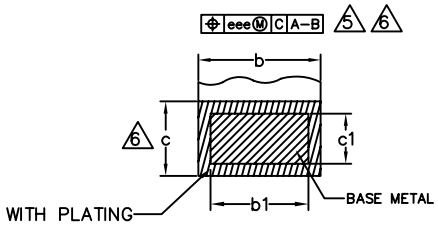

SECTION "F–F"
TERMINAL DETAILS

UNLESS OTHERWISE SPECIFIED DIMENSIONS ARE IN MILLIMETERS

DECIMAL	ANGULAR
X.X ±	±
X.XX ±	
X.XXX ±	

INTERPRET DIM AND TOL PER ASME Y14.5M – 1994

MATERIAL: SEE CHART ABOVE
FINISH: SEE CHART ABOVE
PRINTING IS AN ACTUAL SCALE
FORM NO: MBF_LF_6A.DWG

THIRD ANGLE PROJECTION

APPROVALS		DATE
DESIGNED	AVALL	05/12/06
CHECKED	SKOLLI/KRAUM/KOHER/KEHAN	05/12/06
PRODUCT MANAGER	GJKIM	05/12/06
RELEASED	LCANO	05/17/06

Amkor Technology www.amkor.com

TITLE: PACKAGE OUTLINE, MATRIX TSOP(I), 10 X 20 mm BODY, 1.0 mm THICK, 0.80/0.10 mm FORM

SIZE	BID NUMBER	DWG NUMBER	REV
A3	SEE CHART	35227	03

SELF DWG NO./REV.	PO SPEC NO	SCALE	SHEET
00000/00		1:1	1 of 2

THE DRAWINGS AND INFORMATION CONTAINED HEREIN ARE THE EXCLUSIVE PROPERTY OF AMKOR. THE INFORMATION, DRAWINGS AND DESIGN CONCEPTS CONTAINED HEREIN ARE CONFIDENTIAL/PROPRIETARY, SHALL BE MAINTAINED IN STRICT CONFIDENCE, AND SHALL NOT BE RELEASED TO ANY THIRD PARTY WITHOUT THE EXPRESS WRITTEN PERMISSION OF AMKOR.