REV.	DESCRIPTION	DATE	APPROVED
12	REVISED PER DCN #D21858. (ENG-AF-273 BECOMES 30649/12)	11/03 1994	Y.M.K.
13	REVISED PER DCN #D22207.	02/15 1995	Y.M.K.
14	REVISED PER DCN #D22452.	05/27 1995	Y.M.K.

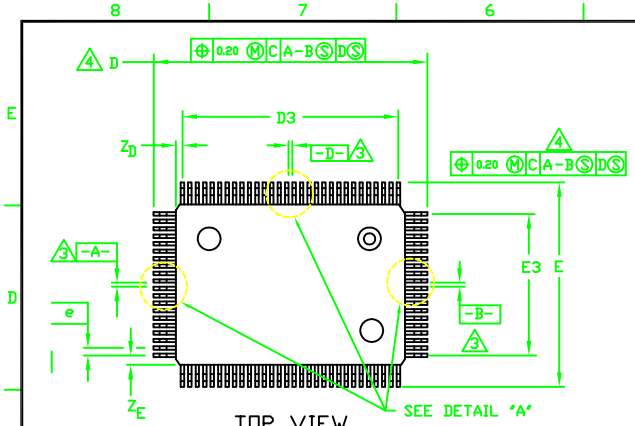

TOP VIEW

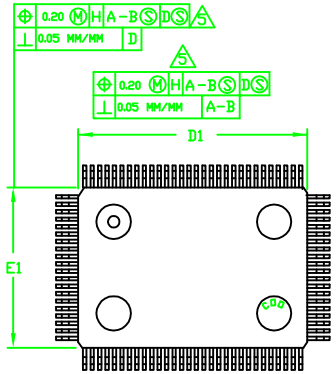

BOTTOM VIEW

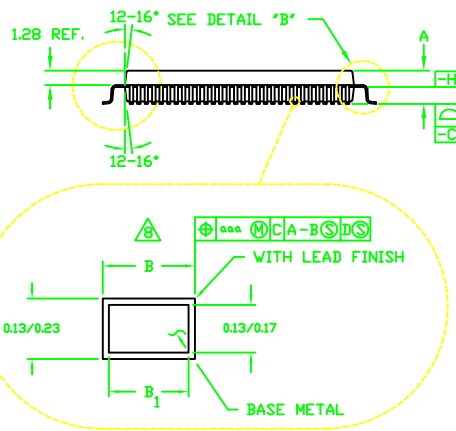

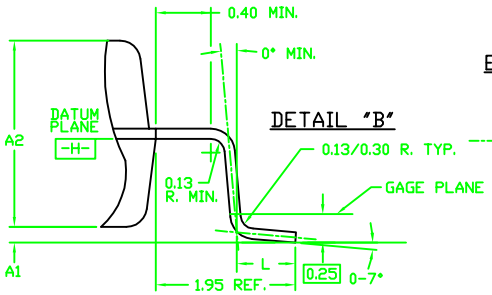

DETAIL "B"

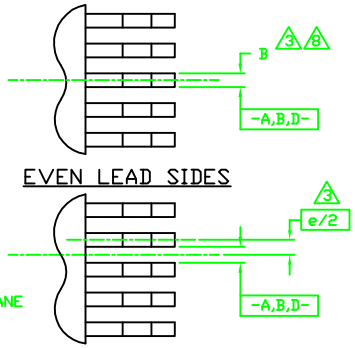

DETAIL "A"

DECIMAL	ANGULAR
XX±	°±
XXX±	
XXXX±	

MATERIAL

FINISH

DO NOT SCALE DRAWING

PROJECTION

APPROVALS		DATE
DRAWN	MS MOON	05/27 1995
CHECKED	Y JANG	05/27 1995
ENGR	BH PARK	05/27 1995
RELEASED	YM KANG	05/27 1995

Anam Industrial Co., LTD.
151-22, Hwayang-Dong
Sungdong-Ku, Seoul, Korea
C.P.O. Box 1075

Amkor Electronics, Inc.
2425 Gateway Drive #200
Irving, Texas 75063

Excellence in semiconductor assembly

anam amkor

TITLE
PACKAGE OUTLINE, MQFP, 14 X 20 BODY, 1.95/0.23 MM FORM, 2.71 MM THICK

SIZE	DWG. NO.	REV.
B	30649	14

SCALE 3/1 SHEET 1 of 2