NOTES:

1. ALL DIMENSIONS AND TOLERANCES CONFORM TO ASME Y14.5M-1994.
2. DATUM PLANE H LOCATED AT MOLD PARTING LINE AND COINCIDENT WITH LEAD, WHERE LEAD EXITS PLASTIC BODY AT BOTTOM OF PARTING LINE.
3. DATUMS A-B AND D TO BE DETERMINED WHERE CENTERLINE BETWEEN LEADS EXITS PLASTIC BODY AT DATUM PLANE H.
4. TO BE DETERMINED AT SEATING PLANE C.
5. DIMENSIONS 14.0 OF BOTTOM VIEW DO NOT INCLUDE MOLD PROTRUSION. ALLOWABLE MOLD PROTRUSION IS 0.254 MM PER SIDE. THESE DIMENSIONS INCLUDE MOLD MISMATCH AND ARE DETERMINED AT DATUM PLANE H.
6. PACKAGE TOP DIMENSIONS ARE SMALLER THAN BOTTOM DIMENSIONS BY 0.20 MM, AND TOP OF PACKAGE WILL NOT OVERHANG BOTTOM OF PACKAGE.
7. DIMENSION 0.17/0.27 OF SECTION "B-B" DOES NOT INCLUDE DAMBAR PROTRUSION. ALLOWABLE DAMBAR PROTRUSION SHALL BE 0.08 MM TOTAL IN EXCESS OF THIS DIMENSION AT MAXIMUM MATERIAL CONDITION. DAMBAR CANNOT BE LOCATED ON THE LOWER RADIUS OR THE FOOT.
8. ALL DIMENSIONS ARE IN MILLIMETERS.
9. MAXIMUM ALLOWABLE DIE THICKNESS TO BE ASSEMBLED IN THIS PACKAGE FAMILY IS 0.635 MM.
10. THESE DIMENSIONS APPLY TO THE FLAT SECTION OF THE LEAD BETWEEN 0.10 MM AND 0.25 MM FROM THE LEAD TIP.

REV.	DESCRIPTION	DATE	ORIGINATOR
00	INITIAL RELEASE PER DCN #D25260	11/5 1997	N.T.K.

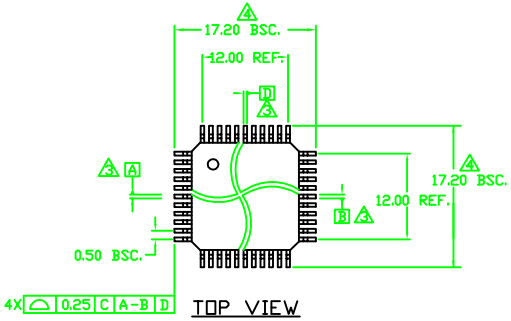

TOP VIEW

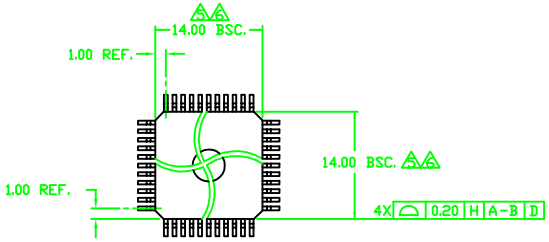

BOTTOM VIEW

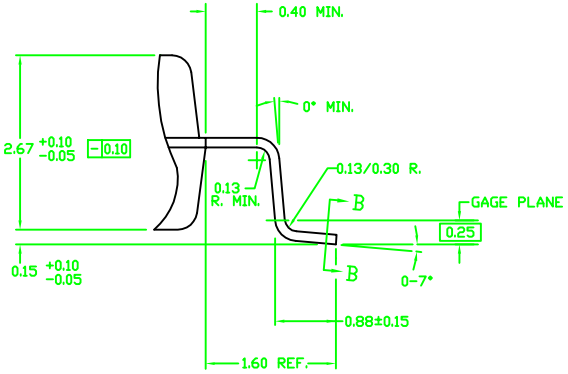

DETAIL "A"

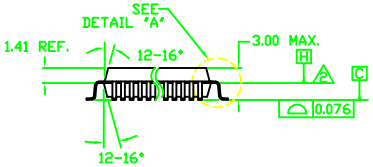

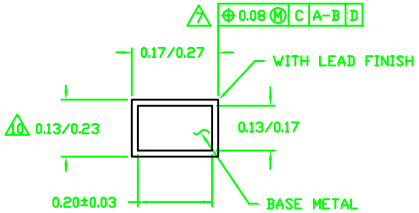

SECTION "B-B"

DECIMAL	ANGULAR
XX±	±
XXX±	
XXXX±	

MATERIAL

FINISH

DO NOT SCALE DRAWING

PROJECTION

APPROVALS		DATE
DRAWN	T. KHAM	10/17 1997
CHECKED	M. PEREZ	10/17 1997
ENG'R	M. PEREZ	11/5 1997
RELEASED	M. ANTONIO	11/5 1997

Anam Industrial Co., LTD. Seoul, Korea
Amkor Electronics Irving, TX
Amkor/Anam Philipines, INC. Manila, Philippines
Amkor Electronics Chandler, AZ

anam amkor EXCELLENCE IN SEMICONDUCTOR ASSEMBLY AND TEST

TITLE: PACKAGE OUTLINE, 100 LEAD, MQFP, 14 X 14 MM BODY, 1.60/0.15 MM FORM, 2.67 MM THICK

SIZE	DWG. NO.	REV.
B	39839	00

SCALE | SHEET 1 OF 1