NORMAL MATRIX LEADFRAME

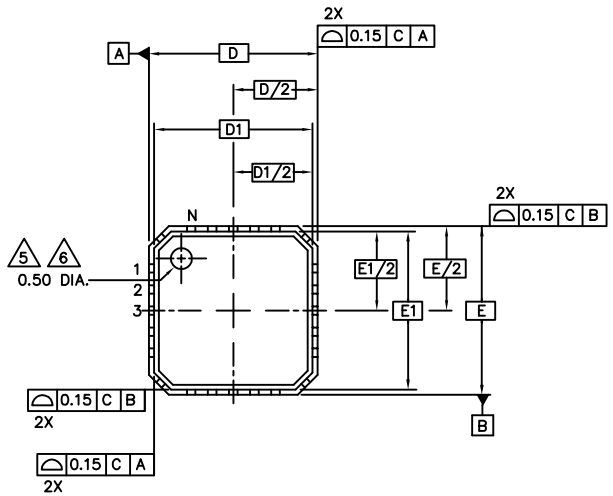

TOP VIEW

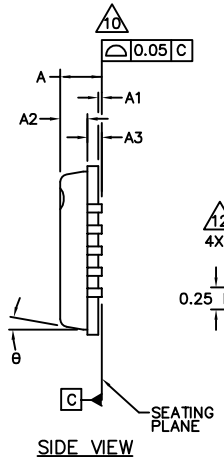

SIDE VIEW

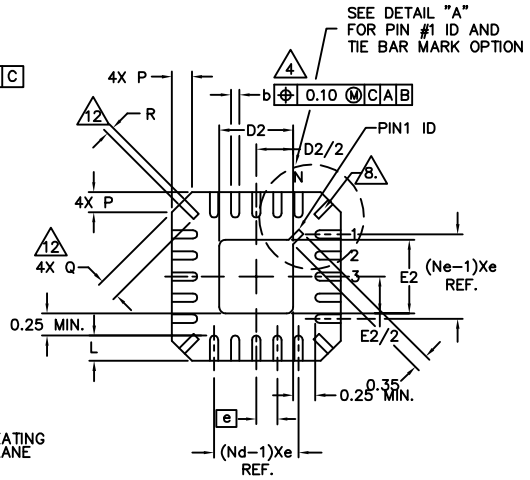

BOTTOM VIEW

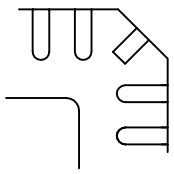

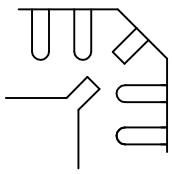

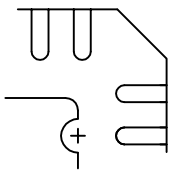

STANDARD

Amkor Technology, Inc.
Chandler, Arizona, USA
Anam Semiconductor, Inc.,
Seoul, Korea
Amkor Technology Philippines, Inc.