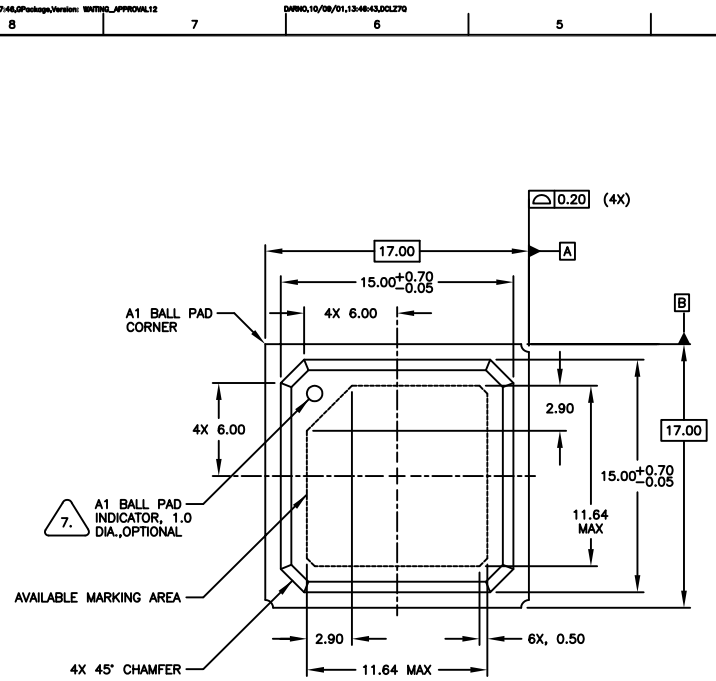

TOP VIEW

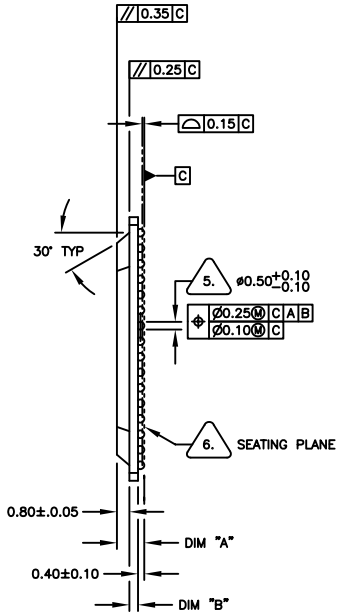

SIDE VIEW

4	1.81±0.21	0.61±0.06	THERMALLY ENHANCED
4	1.76±0.21	0.56±0.06	STANDARD
2	1.56 +0.19 −0.21	0.36 +0.04 −0.06	STANDARD
NO. LAYERS	DIM "A"	DIM "B"	NOTES
PBGA THICKNESS SCHEDULE			

SIZE	DWG NUMBER	REV
A3	71786	VD
SCALE 4:1		SHEET 2 OF 4

FORM NO: MBFLAM202.DWG